CH03-BE

CUSTOMER PRODUCT SPECIFICATION SHEET

RoHS Compliant

CH03-BE - SIM CARD HOLDER WITH SWITCH 6 OR 8 PINS

FEATURES ⚠1

1. GENERAL CHARACTERISTICS
   DIMENSIONS: 29.65L x 17.20W x 3.00H mm
   WEIGHT: APPROX. 1.40g
   CONTACT PRINCIPLE: FRICTION TECHNOLOGY
   OPERATING POSITION: SHAFT UP / DOWN / HORIZONTAL
   MOUNTING SYSTEM: SMT TYPE (post optional)
   DURABILITY: 10,000 CYCLES MIN.

2. MECHANICAL CHARACTERISTICS
   INSULATION MATERIAL: THERMOPLASTIC, UL 94V-0

3. ELECTRICAL CHARACTERISTICS
   CONTACT RESISTANCE: 50M OHMS TYP. 100M OHMS MAX.
   INSULATION RESISTANCE:> 1000M OHMS / 500V DC
   SWITCH TYPE: BLADE (Normally Open)
   RATED CURRENT: 1A MAX.
   RAGED VOLTAGE: 50V MAX.
   WITHSTANDING DIELECTRIC VOLTAGE: 500V AC R.M.S. FOR 1 MINUTE

4. SOLDERABILITY
   WAVE: NOT APPLICABLE
   IR REFLOW: 260°C, 10 SEC. MAX.
   MANUAL SOLDERING: 360°C, 3 SEC. MAX.

5. ENVIRONMENTAL CHARACTERISTICS
   OPERATING TEMPERATURE: -40°C ~ +85°C
   OPERATING HUMIDITY: 10% ~ 95% RH
   STORAGE TEMPERATURE: -40°C ~ +85°C
   STORAGE HUMIDITY: 10% ~ 95% RH

NOTES:
1. ACCEPTABLE SIM CARD SIZE SHOULD MEET GSM 11.11 SPECIFICATION REQUIREMENT.⚠2

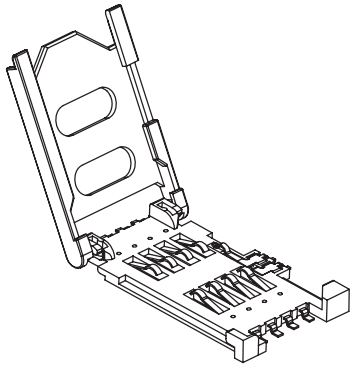

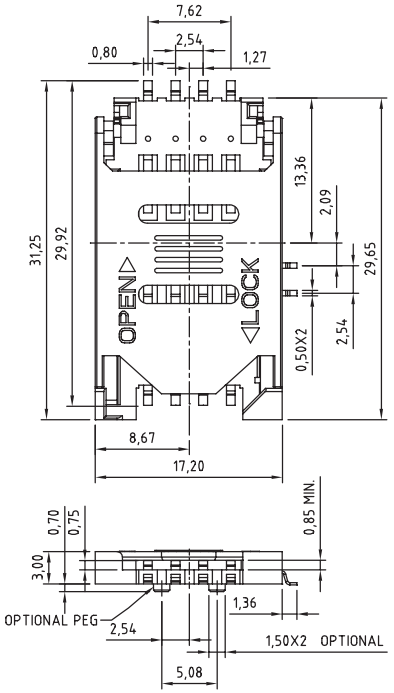

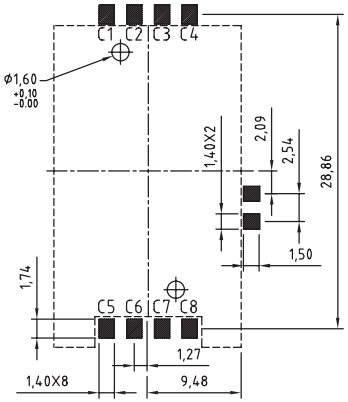

8 PINS VERSION

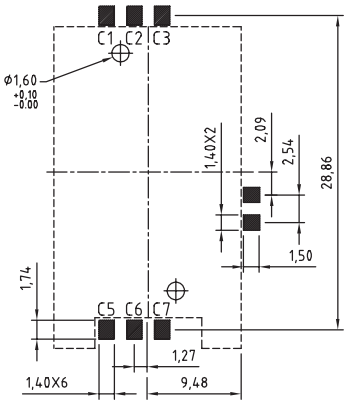

6 PINS VERSION

PCB FOOTPRINT
COMPONENT SIDE

HOW TO ORDER

C H 0 3 - B E X X 0 - 0 X R

NO. OF CONTACTS
06 OR 08

WITH OR WITHOUT
LOCATING PEG
A = WITH
B = WITHOUT

⚠3 PACKAGING OPTIONS
R = REEL
(600PCS/REEL)

REV.	DATE & DRN	
1.0	14/09/'04-NYW	RELEASE
1.1	01/12/'05-CHC	⚠ AMEND FEATURES.
1.2	24/04/'07 - NYW	⚠ ADD NOTE 1.
1.3	28/09/'07 - NYW	⚠ REMOVE PACK OPTION TRAY.
1.4	21/11/'07 - NYW	ADD SEPERATE PCB LAYOUT.
1.5	04/06/'08 - NYW	ADD ELECTRICAL SPEC.
1.6	28/04/'09 - PN	PACKAGING DRAWING ADDED
1.7	04/01/'10 - NYW	DRAWING MODIFICATION.

Scale: 2:1	THIRD ANGLE	Unstated Tolerances: 0 Dec Places, 1 Dec Places, 2 Dec Places, 3 Dec Places	Material SEE NOTE
Drawn: NYW			
App'd: XXXX	Title SIM CARD ACCEPTOR		NOT TO SCALE
Date: 4 JAN '10	Revision: 1.7		Unit: mm

Infratron®

© THIS DRAWING IS CONFIDENTIAL AND MUST NOT BE COPIED OR DISCLOSED WITHOUT WRITTEN CONSENT

Type: CH03-BE

CH03-BE

Drawing Number:

Sheet 1 of 2

Drawing © E and O E

CH03-BE	CUSTOMER PRODUCT SPECIFICATION SHEET	RoHS Compliant

CH03-BE - SIM CARD HOLDER WITH SWITCH 6 OR 8 PINS - PACKAGING DRAWING

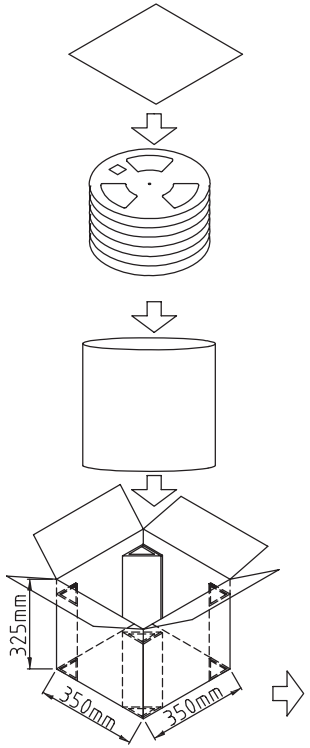

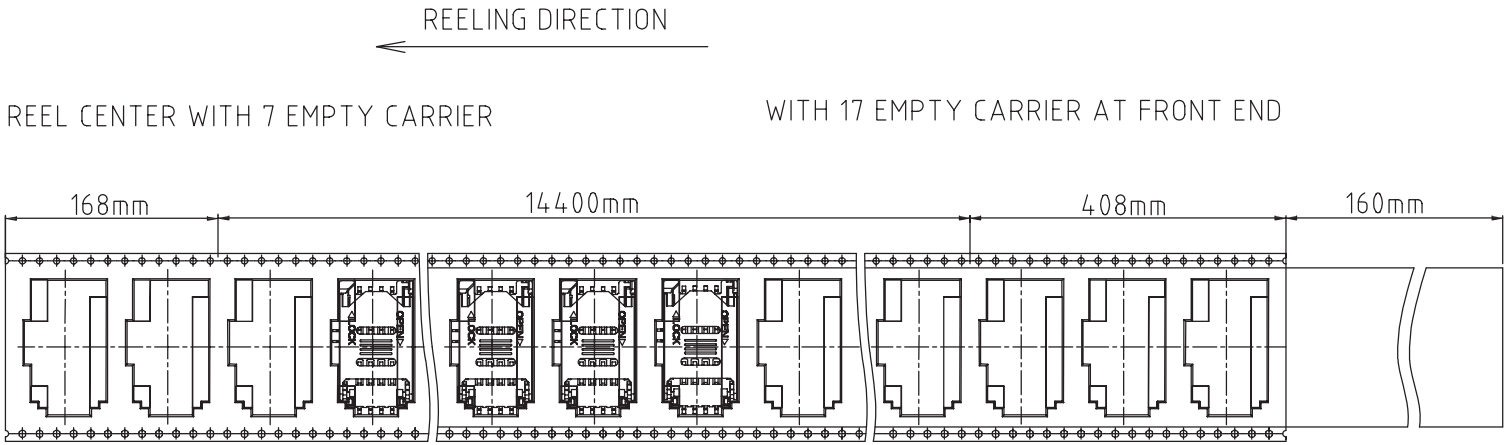

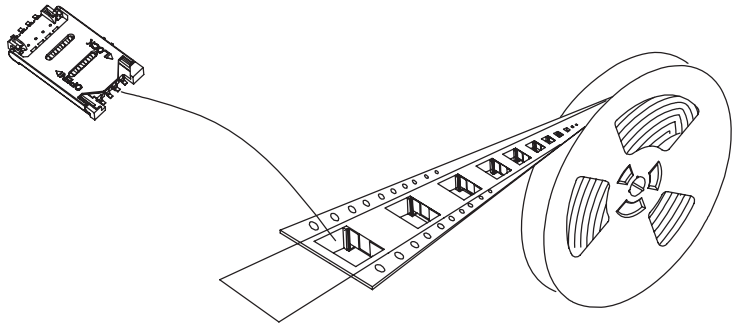

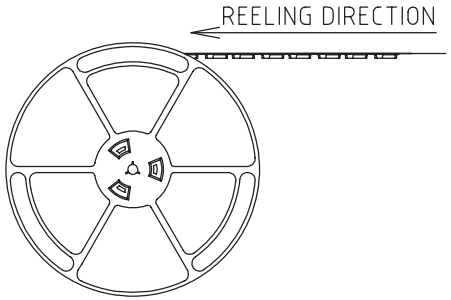

NOTES:
1. REEL DIA.: 33CM.
2. 600PCS PER REEL, GROSS WEIGHT: 1.39KG.
3. 6 REELS PER FULL CARTON, GROSS WEIGHT: 9.54KG.

REV.	DATE & DRN	
1.0	28/04/'09 - PN	PACKAGING DRAWING ADDED

Scale: NTS	THIRD ANGLE	Unstated Tolerances: 0 Dec Places, 1 Dec Places, 2 Dec Places, 3 Dec Places	Material SEE NOTE
Drawn: PN			
App'd: XXXX	Title SIM CARD ACCEPTOR		NOT TO SCALE
Date: 28 APR '09	Revision: 1.0		Unit: mm

Infratron®

© THIS DRAWING IS CONFIDENTIAL AND MUST NOT BE COPIED OR DISCLOSED WITHOUT WRITTEN CONSENT

Type: CH03-BE

CH03-BE

Drawing Number:

Sheet 2 of 2

Drawing © E and O E